The most widely used motors from the world leaders

HX & HX+

ABB

TEFC, S1 Duty
415 ± 10% V, 50Hz ± 5%.
Combined Variation of (absolute sum 10%)

Insulation Class F
Temperature rise Class B (70°C)

2 Pole Ambient 50°C

Output kW	Output HP	Frame Size	Rated Speed (rpm)	I_n (A)	Efficiency % FL	Efficiency % 3/4FL	Efficiency % 1/2FL	Power Factor FL	Power Factor 3/4FL	Power Factor 1/2FL	I_s/I_n	Torque T_s/T_n	Torque T_{max}/T_n	T_n Nm	T_{hot} (Sec)	T_{cold} (Sec)	Weight Kg	GD^2 Kgm^2
0.37	0.5	HX71A2	2790	1.0	63.0	59.0	46.0	0.80	0.73	0.60	4.2	2.0	2.4	1.3	5	12	10	0.001
0.55	0.75	HX71C2	2790	1.4	68.0	64.0	57.0	0.81	0.74	0.63	4.3	1.8	2.3	1.9	5	12	14	0.002
0.75	1.0	HX80A2	2780	1.8	73.0	72.0	68.0	0.82	0.76	0.66	4.8	2.0	2.3	2.6	7	16	10	0.002
1.1	1.5	HX80C2	2780	2.5	74.0	73.0	70.0	0.81	0.74	0.63	4.8	2.1	2.3	3.8	7	16	14	0.003
1.5	2.0	HX+90SLC2	2865	2.9	81.0	81.0	77.0	0.90	0.84	0.74	6.0	2.2	3.0	5.0	5	10	24	0.008
2.2	3.0	HX+90SLD2	2865	4.2	81.5	81.5	77.5	0.90	0.84	0.74	6.0	2.1	3.0	7.3	6	12	26	0.009
3.7	5.0	HX+100LB2	2830	7.2	80.0	79.5	77.5	0.87	0.84	0.74	6.0	2.2	2.7	12.5	6	12	55	0.044
5.5	7.5	HX+132SMB2	2870	10	84.0	84.0	83.0	0.88	0.86	0.83	6.0	2.1	3.0	18.3	7	14	60	0.052
7.5	10	HX+132SMC2	2870	13.5	86.0	86.0	85.0	0.90	0.88	0.85	6.0	2.4	3.0	25.0	7	14	70	0.072
9.3	12.5	HX+132SME2	2870	16	86.5	86.5	85.5	0.91	0.89	0.86	6.0	2.5	3.0	30.9	9	20	80	0.092
11	15	HX+160MLB2	2905	20	88.0	88.0	87.0	0.87	0.85	0.82	6.0	2.2	2.8	36.2	12	28	120	0.128
15	20	HX+160MLD2	2905	26	89.0	89.0	88.0	0.87	0.85	0.82	6.0	2.2	3.0	49.4	12	28	130	0.152
18.5	25	HX+160MLE2	2900	32	91.0	91.0	90.0	0.90	0.87	0.84	6.0	2.5	2.9	60.9	12	28	145	0.182

4 Pole Ambient 50°C

Output kW	Output HP	Frame Size	Rated Speed (rpm)	I_n (A)	Efficiency % FL	Efficiency % 3/4FL	Efficiency % 1/2FL	Power Factor FL	Power Factor 3/4FL	Power Factor 1/2FL	I_s/I_n	Torque T_s/T_n	Torque T_{max}/T_n	T_n Nm	T_{hot} (Sec)	T_{cold} (Sec)	Weight Kg	GD^2 Kgm^2
0.25	0.33	HX71A4	1385	0.8	63.0	61.0	55.0	0.80	0.64	0.51	3.5	1.9	2.2	1.7	7	16	13	0.002
0.37	0.50	HX71B4	1370	1.1	63.0	61.0	55.0	0.80	0.64	0.51	3.5	2.0	2.5	2.6	7	16	13	0.003
0.55	0.75	HX80B4	1400	1.5	65.0	64.0	58.0	0.80	0.67	0.51	3.5	1.8	2.3	3.8	6	14	13	0.008
0.75	1.0	HX80D4	1380	2.0	68.0	67.0	62.0	0.80	0.69	0.55	4.5	1.8	2.3	5.8	4	9	15	0.007
1.1	1.5	HX+90SLD4	1420	2.5	76.0	76.0	74.0	0.80	0.71	0.56	5.5	2.0	2.7	7.4	5	10	25	0.015
1.5	2.0	HX+90SLE4	1420	3.4	77.0	77.0	75.0	0.81	0.73	0.62	5.5	2.0	2.7	10.1	5	12	27	0.017
2.2	3.0	HX+100LB4	1405	4.8	78.0	78.0	76.0	0.81	0.73	0.62	5.5	2.2	2.7	15.0	5	12	38	0.026
3.7	5.0	HX+112MB4	1425	7.6	83.0	83.0	81.0	0.81	0.74	0.63	6.0	2.1	2.8	24.8	5	14	46	0.050
5.5	7.5	HX+132SMC4	1430	11.0	85.0	85.0	83.0	0.82	0.75	0.64	6.0	2.0	2.8	36.7	7	16	70	0.088
7.5	10	HX+132SME4	1430	14.5	85.5	85.5	83.5	0.83	0.76	0.64	6.0	2.0	2.8	50.1	8	16	80	0.112
9.3	12.5	HX+160MLB4	1455	18.8	88.0	88.0	86.0	0.81	0.74	0.63	6.0	2.2	2.8	61.0	8	18	125	0.028
11	15	HX+160MLD4	1455	21.0	89.0	89.0	87.0	0.82	0.76	0.66	6.0	2.1	2.8	72.2	12	28	145	0.252
15	20	HX+160MLE4	1450	28.0	89.0	89.0	87.0	0.82	0.76	0.66	6.0	2.1	2.8	98.8	14	30	160	0.302

6 Pole Ambient 50°C

Output kW	Output HP	Frame Size	Rated Speed (rpm)	I_n (A)	Efficiency % FL	Efficiency % 3/4FL	Efficiency % 1/2FL	Power Factor FL	Power Factor 3/4FL	Power Factor 1/2FL	I_s/I_n	Torque T_s/T_n	Torque T_{max}/T_n	T_n Nm	T_{hot} (Sec)	T_{cold} (Sec)	Weight Kg	GD^2 Kgm^2
0.25	0.33	HX80B6K	895	0.8	63.0	59.0	53.0	0.70	0.59	0.47	3.5	1.9	2.2	2.7	10	24	13	0.006
0.37	0.50	HX80B6	895	1.2	63.5	61.0	55.0	0.70	0.59	0.47	3.5	1.9	2.2	4.0	10	24	13	0.006
0.55	0.75	HX80D6	900	1.6	66.0	64.0	60.0	0.73	0.65	0.50	3.5	1.9	2.2	5.8	10	24	15	0.008
0.75	1.0	HX+90SLD6	910	2.0	73.0	73.0	70.0	0.70	0.60	0.52	3.5	1.8	2.1	7.8	10	24	25	0.015
1.1	1.5	HX+90SLE6	915	2.9	74.0	74.0	71.0	0.70	0.60	0.52	3.5	1.8	2.1	11.2	12	25	28	0.017
1.5	2.0	HX+100LB6	935	4.0	75.5	75.5	72.5	0.70	0.61	0.54	4.5	2.2	2.5	15.3	10	24	35	0.026
2.2	3.0	HX+112MB6	940	5.9	78.5	78.5	76.5	0.70	0.61	0.54	5.0	2.0	2.5	21.9	10	20	46	0.050
3.7	5.0	HX+132SMC6	960	8.3	83.0	83.0	81.0	0.70	0.66	0.54	5.5	2.2	2.6	36.8	8	19	70	0.088
5.5	7.5	HX+132SME6	960	12.5	83.5	83.5	81.5	0.72	0.68	0.62	5.5	2.2	2.6	54.4	10	20	80	0.120
7.5	10	HX+160MLC6	960	15.5	87.5	87.5	86.5	0.77	0.72	0.60	5.5	1.9	2.5	74.6	8	18	145	0.326
9.3	12.5	HX+160MLD6	965	19.0	88.0	88.0	86.0	0.77	0.72	0.60	6.0	2.0	2.5	92.0	8	18	155	0.372
11	15	HX+160MLE6	965	23.0	88.0	88.0	86.0	0.77	0.72	0.60	6.0	2.0	2.5	109.0	9	20	170	0.446

8 Pole Ambient 50°C

Output kW	Output HP	Frame Size	Rated Speed (rpm)	I_n (A)	Efficiency % FL	Efficiency % 3/4FL	Efficiency % 1/2FL	Power Factor FL	Power Factor 3/4FL	Power Factor 1/2FL	I_s/I_n	Torque T_s/T_n	Torque T_{max}/T_n	T_n Nm	T_{hot} (Sec)	T_{cold} (Sec)	Weight Kg	GD^2 Kgm^2
0.37	0.5	HX+90SLA8	680	1.4	58.0	55.0	48.0	0.65	0.55	0.40	2.8	1.6	1.9	5.20	10	24	22	0.012
0.55	0.75	HX+90SLD8	690	1.9	63.0	60.0	54.0	0.63	0.55	0.40	3.2	1.8	2.1	7.70	10	24	25	0.015
0.75	1.0	HX+100LA8	695	3.1	63.0	62.0	57.0	0.56	0.50	0.37	3.0	1.8	2.1	10.3	10	24	35	0.020
1.10	1.5	HX+100LB8	695	3.9	62.5	62.0	57.0	0.59	0.51	0.38	3.0	1.8	2.3	15.1	10	24	35	0.026
1.50	2.0	HX+112MA8	700	4.8	69.0	67.0	63.0	0.60	0.51	0.41	3.5	1.8	2.3	20.5	9	20	45	0.044
2.20	3.0	HX+132SMB8	710	6.3	77.0	76.0	71.0	0.65	0.55	0.42	4.1	1.9	2.4	29.6	8	19	60	0.060
3.70	5.0	HX+160MLB8	715	8.0	82.5	82.5	79.5	0.77	0.70	0.61	5.1	1.8	2.4	49.4	9	20	125	0.288
5.50	7.5	HX+160MLD8	715	12.0	85.0	84.0	82.0	0.79	0.72	0.59	5.1	1.8	2.5	73.5	13	29	155	0.372
7.50	10	HX+160MLE8	715	16.0	85.0	84.0	82.0	0.79	0.72	0.59	5.1	1.8	2.5	98.8	15	30	170	0.446

I_n = Nominal or rated current
T_{max} = Maximum torque
I_s = Starting current
T_s = Starting torque
T_n = Nominal or rated torque in Nm
T_{cold} = Cold withstand time
T_{hot} = Hot withstand time

* Frame 71 & 80 are designed for ambient 45°c and temperature rise of 75°c.
Note : All performance figures are subject to IS tolerances.

Dimension Drawing Foot HX 71 & 80, HX +90 to HX +160
Mounting Designation B3, B6, B8, V5, V6

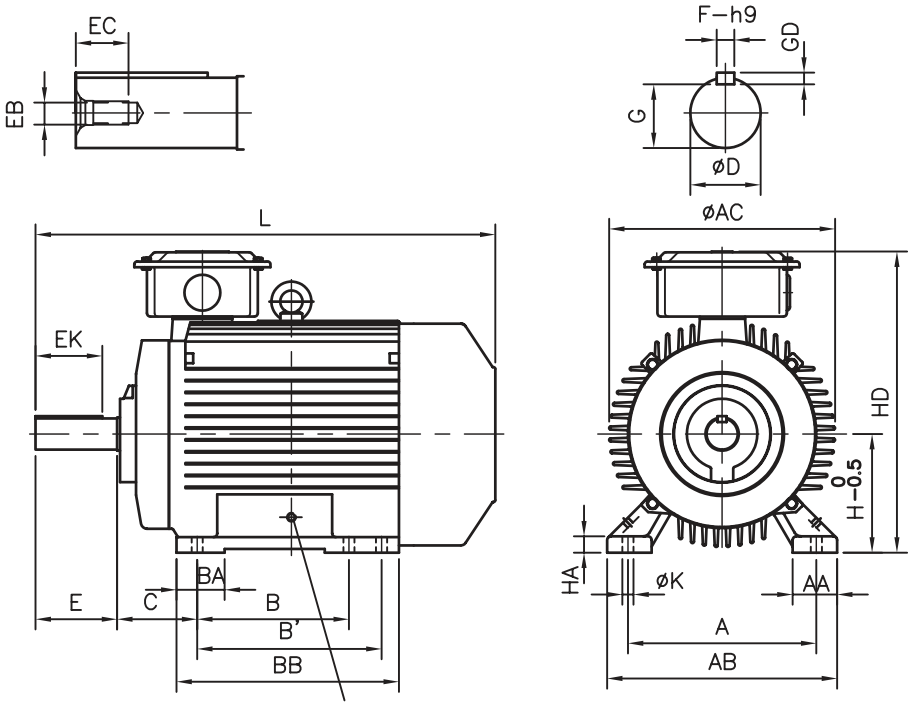

2 Nos. M6 earthing screw for HX71–112
2 Nos. M10 earthing screw for HX132,160

Frame	A	AA	AB	AC	B	B'	BA	BB	C	D TOL.	E	EB	EC	EK
HX 71	112	25	130	136	90	-	26	110	45	14-j6	30	M5	12	16
HX 80	125		147	152	100	-	30	126	50	19-j6	40	M6	17	24
HX +90SL	140	27	162	174		125	40	158	56	24-j6	50	M8	19	32
HX +100L	160	42	200	200	140	-	47	180	63	28-j6	60	M10	22	42
HX +112M	190	48	230	221		-			70					
HX +132SM	216		256	258		178		218	89	38-k6	80	M12	28	60
HX +160ML	254	60	310	305	210	254	65	310	108	42-K6	110	M16	36	90

Frame	F	G	GD	H	HA	HD	K	L	Bearing DS	Bearing NDS
HX 71	5	11	5	71	9	186	7	255	6203ZZ C3	6202ZZ C3
HX 80	6	15.5	6	80	10	203	10	290	6204ZZ C3	6203ZZ C3
HX +90SL	8	20	7	90	13	241		329	6205ZZ C3	6205ZZ C3
HX +100L		24		100	15	266	12	387	6306ZZ C3	6206ZZ C3
HX +112M				112	18	288		390	6307ZZ C3	6206ZZ C3
HX +132SM	10	33	8	132	20	328		468	6308ZZ C3	6307ZZ C3
HX +160ML	12	37		160	22	407	15	671	6309ZZ C3	6308ZZ C3

All Dimensions are in mm

* For HX +90SLD2, HX +90SLE4 & HX +90SLE6 , L=345
* For HX +132SME2, HX +132SME4 & HX +132SME6, L=508
* For HX + 160ML, conduit entry is double

Dimension Drawing Flange HXF 71 & 80, HXF +90 to HXF +160
Mounting Designation B5, V1

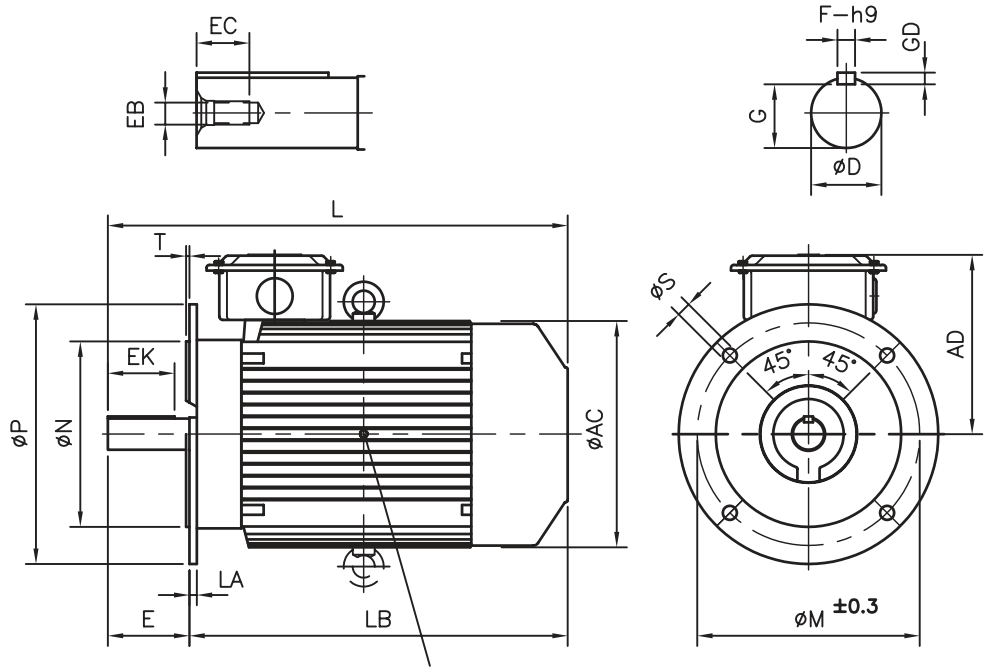

2 Nos. M6 earthing screw for HX71–112
2 Nos. M10 earthing screw for HX132,160

Frame	AC	AD	D - TOL.	E	EB	EC	EK	F	G	GD	L	LA
HXF +71	136	115	14-j6	30	M5	12	16	5	11	5	255	9
HXF +80	152	123	19-j6	40	M6	17	24	6	15.5	6	290	10
HXF +90SL	174	151	24-j6	50	M8	19	32	8	20	7	329	
HXF +100L	200	166	28-j6	60	M10	22	42		24		387	11
HXF+112M	221	176									390	
HXF +132SM	258	196	38-j6	80	M12	28	60	10	33	8	468	12
HXF +160SM	305	247	42-k6	110	M16	36	90	12	37	8	671	16

Frame	LB	M	N - TOL.	P	S	T	Bearing DS	Bearing NDS
HXF +71	229	130	110-j6	160	10	3.5	6203ZZ C3	6202ZZ C3
HXF +80	250	165	130-j6	200	12		6204ZZ C3	6203ZZ C3
HXF +90SL	279						6205ZZ C3	6205ZZ C3
HXF +100L	327	215	180-j6	250	15	4	6306ZZ C3	6206ZZ C3
HXF +112M	330						6307ZZ C3	6206ZZ C3
HXF +132SM	388	265	230-j6	300			6308ZZ C3	6307ZZ C3
HXF +160ML	561	300	250-j6	350	19	5	6309ZZ C3	6308ZZ C3

* For 71 to160 frame: Sheet metal terminal box.
* For HXF +90SLD2, HXF +90SLE4 & HXF +90SLE6 , L=345
* For HXF +132SME2, HXF +132SME4 & HXF +132SME6, L=508
* For HXF + 160ML, conduit entry is double

TEFC, S1 Duty
415 ± 10% V, 50Hz ± 5%.
Combined Variation of (absolute sum 10%)

Insulation Class F
Temperature rise Class B (70°C)

2 Pole Ambient 50°C

Output kW	Output HP	Frame Size	Rated Speed (rpm)	I_n (A)	Efficiency % FL	Efficiency % 3/4FL	Efficiency % 1/2FL	Power Factor FL	Power Factor 3/4FL	Power Factor 1/2FL	I_s/I_n	Torque T_s/T_n	Torque T_{max}/T_n	T_n Nm	T_{hot} (Sec)	T_{cold} (Sec)	Weight Kg	GD^2 Kgm^2
22	30	HX+180MLB2	2925	37.5	92.1	92.1	91.1	0.89	0.87	0.81	6.0	2.3	3.0	72	20	46	170	0.25
30	40	HX+200MLB2	2940	51.0	92.6	92.6	91.0	0.88	0.86	0.81	6.0	2.3	3.0	97	20	46	240	0.72
37	50	HX+200MLC2	2940	62.0	93.1	93.1	92.1	0.89	0.87	0.81	6.0	2.4	2.7	120	20	46	260	0.78
45	60	HX+225SMC2	2955	75.0	93.5	93.5	92.5	0.89	0.87	0.81	6.0	2.6	3.0	145	20	46	330	1.28
55	75	HX+250MB2	2960	91.5	94.0	94.0	93.0	0.89	0.87	0.81	6.0	2.4	3.0	177	20	46	440	1.92
75	100	HX+280SMB2	2965	123.0	94.2	94.2	93.2	0.90	0.88	0.82	6.0	2.0	3.0	242	20	46	610	3.28
90	125	HX+280SMC2	2965	147.0	94.5	94.5	93.5	0.90	0.89	0.83	6.0	2.2	3.0	290	20	46	640	3.42

4 Pole Ambient 50°C

Output kW	Output HP	Frame Size	Rated Speed (rpm)	I_n (A)	Efficiency % FL	Efficiency % 3/4FL	Efficiency % 1/2FL	Power Factor FL	Power Factor 3/4FL	Power Factor 1/2FL	I_s/I_n	Torque T_s/T_n	Torque T_{max}/T_n	T_n Nm	T_{hot} (Sec)	T_{cold} (Sec)	Weight Kg	GD^2 Kgm^2
18.5	25	HX+180MLB4	1455	34.5	90.6	90.6	89.6	0.82	0.76	0.66	6.0	2.4	2.7	121	15	34	175	0.48
22	30	HX+180MLC4	1460	40.5	91.5	91.5	90.5	0.83	0.78	0.70	6.0	2.6	2.7	144	15	34	185	0.54
30	40	HX+200MLC4	1470	54.5	92.6	92.6	91.6	0.83	0.78	0.70	6.0	2.6	2.7	195	15	34	245	1.20
37	50	HX+225SMB4	1470	67.0	92.8	92.8	91.8	0.83	0.78	0.70	6.0	2.2	2.7	240	20	46	310	1.40
45	60	HX+225SMC4	1470	81.0	93.3	93.3	92.3	0.86	0.78	0.73	6.0	2.2	2.7	292	20	46	340	1.52
55	75	HX+250MB4	1475	98.5	93.8	93.8	92.8	0.83	0.78	0.70	6.0	2.4	2.7	356	20	46	435	2.80
75	100	HX+280SMB4	1475	131.0	93.8	93.8	92.8	0.85	0.80	0.72	6.0	2.3	2.7	486	20	46	610	4.44
90	125	HX+280SMC4	1475	157.0	94.0	94.0	93.0	0.85	0.82	0.73	6.0	2.4	2.7	583	20	46	680	5.32

6 Pole Ambient 50°C

Output kW	Output HP	Frame Size	Rated Speed (rpm)	I_n (A)	Efficiency % FL	Efficiency % 3/4FL	Efficiency % 1/2FL	Power Factor FL	Power Factor 3/4FL	Power Factor 1/2FL	I_s/I_n	Torque T_s/T_n	Torque T_{max}/T_n	T_n Nm	T_{hot} (Sec)	T_{cold} (Sec)	Weight Kg	GD^2 Kgm^2
15	20	HX+180MLC6	965	30.0	89.0	89.0	87.0	0.79	0.72	0.59	6.0	2.4	3.0	148	15	34	185	0.68
18.5	25	HX+200MLB6	985	36.0	90.5	90.5	88.5	0.79	0.72	0.59	6.0	2.3	3.0	179	15	34	230	1.60
22	30	HX+200MLC6	985	42.0	91.7	91.7	89.7	0.79	0.72	0.59	6.0	2.4	3.0	213	15	34	300	1.80
30	40	HX+225SMC6	985	55.5	92.1	92.1	90.1	0.82	0.76	0.66	6.0	2.4	2.8	291	20	46	320	2.98
37	50	HX+250MB6	985	66.0	92.8	92.8	90.8	0.84	0.80	0.71	6.0	2.4	2.8	359	20	46	420	4.80
45	60	HX+280SMB6	985	79.5	93.6	93.6	91.6	0.84	0.80	0.71	6.0	2.3	2.6	436	20	46	590	7.20
55	75	HX+280SMC6	985	97.0	93.8	93.8	91.8	0.84	0.80	0.71	6.0	2.1	2.7	533	20	46	600	8.10

8 Pole Ambient 50°C

Output kW	Output HP	Frame Size	Rated Speed (rpm)	I_n (A)	Efficiency % FL	Efficiency % 3/4FL	Efficiency % 1/2FL	Power Factor FL	Power Factor 3/4FL	Power Factor 1/2FL	I_s/I_n	Torque T_s/T_n	Torque T_{max}/T_n	T_n Nm	T_{hot} (Sec)	T_{cold} (Sec)	Weight Kg	GD^2 Kgm^2
9.3	12.5	HX+180MLA8	725	20.0	87.0	87.0	85.0	0.75	0.67	0.53	6.0	1.8	2.6	123	13	29	160	0.64
11	15	HX+180MLB8	725	23.5	87.0	87.0	85.0	0.75	0.67	0.53	6.0	2.0	2.5	145	13	29	170	0.72
15	20	HX+200MLC8	735	31.5	88.0	88.0	86.0	0.75	0.67	0.53	6.0	2.2	2.5	195	15	34	240	1.98
18.5	25	HX+225SMB8	735	38.5	90.0	90.0	89.0	0.74	0.66	0.52	6.0	2.2	2.3	240	18	40	320	3.32
22	30	HX+225SMC8	735	45.5	91.0	91.0	89.0	0.74	0.66	0.52	6.0	2.1	2.3	286	18	40	340	3.50
30	40	HX+250MB8	740	60.0	91.5	91.5	89.5	0.76	0.68	0.54	6.0	2.1	2.3	387	18	40	520	4.54
37	50	HX+280SMB8	740	73.5	92.0	92.0	90.0	0.76	0.73	0.61	6.0	2.1	2.3	478	18	40	590	7.64
45	60	HX+280SMC8	740	89.0	92.5	92.5	90.5	0.76	0.73	0.61	6.0	2.1	2.3	581	18	40	600	7.75

I_n = Nominal or rated current
T_{max} = Maximum torque
I_s = Starting current
T_s = Starting torque
T_n = Nominal or rated torque in Nm
T_{cold} = Cold withstand time
T_{hot} = Hot withstand time
*These motors have temperature rise of class F

Note : All performance figures are subject to IS tolerances.

Dimension Drawing Foot HX+180...280
Mounting Designation B3, B6, B8, V5, V6

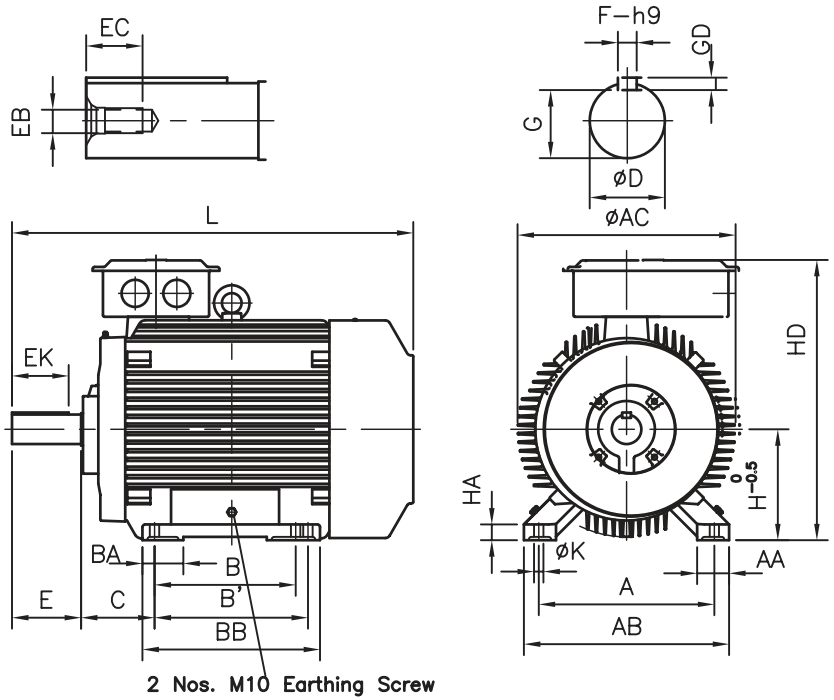

Frame	A	AA	AB	AC	B	B'	BA	BB	C	D - TOL.	E	EB	EC
HX + 180 ML	279	58	324	348	241	279	58	324	121	48-k6	110	M16	36
HX + 200 ML	318	70	378	381	267	305	81	354	133	55-m6		M20	42
HX + 225SM 2P / 4...8P	356	65	416	442	286	311	83	360	149	55-m6			
HX + 250M 2P / 4...8P	406	80	473	495	349	-	93	406	168	60-m6	140		
HX + 280SM 2P / 4...8P	457	85	530	556	368	419	105	486	190	65-m6			
										75-m6			

Frame	EK	F	G	GD	H	HA	HD	K	L	Bearing DS	Bearing NDS
HX + 180 ML	90	14	42.5	9	180	26	446	15	706	6310ZZ C3	6309ZZ C3
HX + 200 ML		16	49	10	200	30	484	19	731	6312ZZ C3	6311ZZ C3
HX + 225SM 2P / 4...8P		16	49	10	225	32	562	19	833	6313 C3	6312 C3
HX + 250M 2P / 4...8P	115	18	53	11	250	40	612	24	910	6315 C3	6313 C3
HX + 280SM 2P / 4...8P			58		280		728		1040	6316 C3	6315 C3
		20	67.5	12							

* For 180-200 Frame Flange Mounted Motors 4 nos mounting holes are provided.
* For 225-280 frame flange mounted motors 8 nos mounting holes are provided.

Dimension Drawing Flange HXF+180...280
Mounting Designation B5, V1

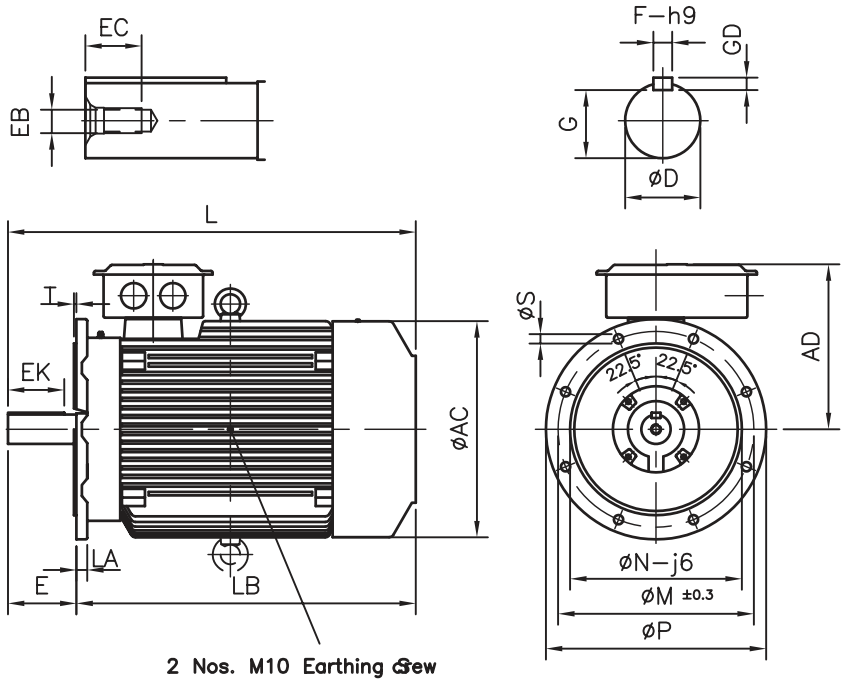

Frame	AC	AD	D-Tol.	E	EB	EC	EK	F	G	GD	L
HXF +180 ML	348	266	48-k6	110	M16	36	90	14	42.5	9	706
HXF + 200 ML	381	284	55-m6		M20	42		16	49	10	731
HXF + 225SM 2P / 4...8P	442	337	55-m6		M20	42	115			11	833
HXF + 250M 2P / 4...8P	495	362	60-m6	140				18	53		910
HXF + 280SM 2P / 4...8P	556	448	65-m6						58		1040
			75-m6					20	67.5	12	

Frame	LA	LB	M	N-Tol.	P	S	T	Bearing DS	Bearing NDS
HXF + 180 ML	20	596	300	250	350	19	5	6310ZZ C3	6309ZZ C3
HXF + 200 ML		621	350	300	400			6312ZZ C3	6311ZZ C3
HXF + 225SM 2P / 4...8P	22	723 / 693	400	350-j6	450			6313 C3	6312 C3
HXF + 250M 2P / 4...8P		770	500	450-j6	550			6315 C3	6313 C3
HXF + 280SM 2P / 4...8P		900						6316 C3	6315 C3

All Dimensions are in mm.
* For 180-250 frame : Sheet metal terminal box, 280 frame : Cast iron terminal box.

ABB Limited
BU -LV Motors
32, Industrial Area,
N.I.T., Faridabad - 121 001
INDIA.
Tel: +91 129 4023001-05
Fax : +91 129 4023006

Regional Marketing Offices :

North

14, Mathura Road,
Faridabad - 121 003
Tel: +91 129 - 2275592/9627
Fax: +91 129 - 2275019

Chandigarh
ABB Ltd.
SCO-13,14,15,
3rd Floor, Sector-34A,
Chandigarh-160022
Tel: +91 172 2606375
Fax: +91 172 2601618

Jaipur
Tel: +91 141 2744024
Fax: +91 141 2744027

Lucknow
Tel: +91 522 2209436
Fax: +91 522 2209478

Ludhiana
Tel: +91 161 5082395
Fax: +91 161 5082396

Dehradun
Tel: +91 135 2760654
Fax: +91 135 2760655

East

No. 9, 4th Floor
Lala Lajpat Rai
Sarani, (Elgin Road)
Kolkata 700 020
Tel: +91 33 22832911/06
Fax: +91 33 22892990

Bhubaneshwar
Tel: +91 674 2541062
Fax: +91 674 2540985

Jamshedpur
Tel: +91 657 2224016
Fax: +91 657 2223009

Guwhati
Tel: +91 361 2133055

West

ABB House
Dr. S B Path
Ballard Estate
Mumbai 400 038
Tel: +91 22 56318231-39
Fax: +91 22 56318276-77

Pune
Tel: +91 20 25881503-06
Fax: +91 20 56016255

Vadodara
Tel: +91 265 2642141-42
Fax: +91 265 2638911

Ahemadabad
Tel: +91 679 22871478

Nagpur
Tel: +91 9822737622

Central

4th & 5th Floor,
Maruti Heights
Aamanaka, G.E. Road
Raipur - 492 099
Tel: +91 771 4701016-18
Fax: +91 771 4701019

Bhopal
ABB Ltd.
FF-9A, Mansarovar
Commercial Complex,
Hosangabad Road,
Bhopal-462016
Tel: +91 755 4223572
Fax: ++91 755 4253323

Indore
Tel: +91 731 - 2481288

South

Embassy Star, 1st Floor
No. 8, Palace Road
Vasanth Nagar
Bangalore-560 052
Tel: +91 80 22949779/815
Fax: +91 80 22949808

Century Plaza
No. 3C, 3D, 3F, 3rd Floor
561 / 562, Anna Salai
Teynampet
Chennai 600 018
Tel: +91 44 24340201-203
Fax: +91 44 24340282

Coimbatore
Tel: +91 422 2313415
Fax: +91 422 2313415

Hyderabad
Tel: +91 40 27675988
Fax: +91 40 27607580

Kochi
Tel: +91 484 3942600
Resident Manager:
Tel: +91 94471 37264

Visakhapatnam
Tel: +91 891 2538188

www.abb.co.in

Cat - 02 R0 01-05-07

The most widely used motors from the world leaders

M2BA M 2000 range

ABB

TEFC, S1 Duty
415 ± 10% V, 50 ± 5%Hz.
Combined Variation of ±10%
IP 55, IC 0141

Insulation Class F
Ambient 50°C (Temp. rise class B 70°C)

2 Pole

Output kW	Output HP	Frame Size	Rated Speed (rpm)	I_n (A)	Efficiency % FL	Efficiency % 3/4FL	Efficiency % 1/2FL	Power Factor FL	Power Factor 3/4FL	Power Factor 1/2FL	I_s/I_n	Torque T_s/T_n	Torque T_{max}/T_n	T_n Nm	T_{hot} (Sec)	T_{cold} (Sec)	Weight Kg	GD^2 Kgm^2
110	150	M2BA315SMA2	2980	185	95.0	95.0	94.0	0.87	0.83	0.75	7.0	1.1	3.0	353	45	91	875	5.0
132	180	M2BA315SMB2	2980	217	95.3	95.3	94.3	0.89	0.86	0.80	7.0	1.2	3.0	423	40	83	915	5.8
160	220	M2BA315MLA2	2980	256	95.6	95.6	94.6	0.90	0.87	0.81	7.0	1.4	2.7	513	50	98	1125	7.8
200	270	M2BA315MLC2	2979	318	96.0	96.0	95.0	0.90	0.87	0.81	7.0	1.5	3.0	641	50	102	1275	10.2
250	340	M2BA355SMA2	2978	405	96.0	96.0	95.0	0.90	0.87	0.81	7.0	1.5	3.0	802	60	115	1645	17.0
315	425	M2BA355MLA2	2978	500	96.1	96.1	95.1	0.91	0.88	0.82	7.0	1.5	3.0	1010	70	138	1895	23.0

4 Pole

Output kW	Output HP	Frame Size	Rated Speed (rpm)	I_n (A)	Efficiency % FL	Efficiency % 3/4FL	Efficiency % 1/2FL	Power Factor FL	Power Factor 3/4FL	Power Factor 1/2FL	I_s/I_n	Torque T_s/T_n	Torque T_{max}/T_n	T_n Nm	T_{hot} (Sec)	T_{cold} (Sec)	Weight Kg	GD^2 Kgm^2
110	150	M2BA315SMA4	1485	190	95.2	95.2	94.2	0.86	0.82	0.74	6.0	2.0	2.7	707	34	70	905	9.5
132	180	M2BA315SMB4	1485	227	95.5	95.5	94.5	0.87	0.83	0.75	6.0	2.0	2.7	849	31	63	960	10.6
160	220	M2BA315MLA4	1485	267	95.8	95.8	94.8	0.87	0.83	0.75	6.0	2.0	2.7	1029	34	70	1110	13.5
187	250	M2BA315MLB4	1485	307	95.8	95.8	94.8	0.87	0.83	0.75	6.0	2.0	2.7	1202	32	65	1150	15.6
200	270	M2BA315MLC4	1485	329	96.0	96.0	95.0	0.88	0.85	0.79	6.0	2.2	2.8	1286	36	75	1260	17.0
250	340	M2BA355SMA4	1486	416	96.1	96.1	95.1	0.87	0.83	0.75	6.0	2.0	2.6	1607	60	110	1620	26.5
315	425	M2BA355MLA4	1486	530	96.3	96.3	95.3	0.87	0.82	0.73	6.5	2.0	3.0	2024	70	120	1870	33.0
355	475	M2BA355MLB4	1487	585	96.5	96.5	95.5	0.87	0.82	0.73	6.5	1.5	2.7	2280	70	120	2110	40.0

6 Pole

Output kW	Output HP	Frame Size	Rated Speed (rpm)	I_n (A)	Efficiency % FL	Efficiency % 3/4FL	Efficiency % 1/2FL	Power Factor FL	Power Factor 3/4FL	Power Factor 1/2FL	I_s/I_n	Torque T_s/T_n	Torque T_{max}/T_n	T_n Nm	T_{hot} (Sec)	T_{cold} (Sec)	Weight Kg	GD^2 Kgm^2
75	100	M2BA315SMA6	986	132	94.2	94.2	92.2	0.85	0.81	0.72	6.0	2.0	2.5	726	27	55	860	14.2
90	120	M2BA315SMB6	988	158	94.5	94.5	92.5	0.84	0.79	0.70	6.5	2.3	2.7	870	21	43	930	16.7
110	150	M2BA315SMC6	988	193	94.6	94.6	92.6	0.84	0.79	0.70	6.5	2.3	2.7	1063	26	54	1005	20.0
132	180	M2BA315MLC6	988	228	94.9	94.9	92.9	0.85	0.80	0.71	6.5	2.3	2.7	1276	24	50	1240	28.2
160	220	M2BA355SMA6	989	275	95.2	95.2	93.2	0.85	0.80	0.71	6.5	1.8	2.6	1545	58	120	1595	42.0
200	270	M2BA355SMB6	990	343	95.5	95.5	93.5	0.85	0.80	0.71	6.5	1.9	2.7	1929	60	115	1800	50.5
250	340	M2BA355MLA6	988	432	95.6	95.6	93.6	0.85	0.80	0.71	6.5	1.9	2.7	2416	52	107	1940	55.0
315	425	M2BA355MLB6	988	550	95.6	95.6	93.6	0.82	0.77	0.68	6.5	1.9	2.7	3044	52	107	2040	60.24

8 Pole

Output kW	Output HP	Frame Size	Rated Speed (rpm)	I_n (A)	Efficiency % FL	Efficiency % 3/4FL	Efficiency % 1/2FL	Power Factor FL	Power Factor 3/4FL	Power Factor 1/2FL	I_s/I_n	Torque T_s/T_n	Torque T_{max}/T_n	T_n Nm	T_{hot} (Sec)	T_{cold} (Sec)	Weight Kg	GD^2 Kgm^2
55	75	M2BA315SMA8	740	101	93.5	93.5	91.5	0.81	0.73	0.61	6.0	1.7	2.5	710	29	59	830	13.0
75	100	M2BA315SMB8	740	135	94.0	94.0	92.0	0.82	0.75	0.65	6.0	1.8	2.5	968	30	61	975	18.8
90	120	M2BA315SMC8	740	162	94.5	94.5	92.5	0.82	0.75	0.65	6.0	1.9	2.5	1161	30	61	1055	22.0
110	150	M2BA315MLB8	740	197	94.6	94.6	92.6	0.82	0.75	0.65	6.0	1.8	2.5	1420	24	49	1125	23.6
132	180	M2BA355SMA8	740	239	94.7	94.7	92.7	0.81	0.73	0.61	6.0	1.5	2.3	1704	32	66	1590	42.0
160	220	M2BA355MLA8	740	289	95.0	95.0	93.0	0.80	0.72	0.60	6.0	1.8	2.5	2065	40	82	1945	55.0
200	270	M2BA355MLB8	740	385	95.3	95.3	93.3	0.76	0.68	0.54	6.0	1.7	2.6	2581	70	150	2090	64.2
250	340	M2BA355MLB8K	740	470	95.5	95.5	93.5	0.77	0.69	0.57	6.0	1.5	3.0	3226	70	150	2100	66.0

*** On request, motors of higher kw can be offered.**

I_n = Nominal or rated current
T_n = Nominal or rated torque in Nm
T_{max} = Maximum torque
T_{cold} = Cold withstand time
I_s = Starting current
T_s = Starting torque
T_{hot} = Hot withstand time

Note :
1. All performance figures are subject to IS tolerances.
2. Max. load GD^2 has been calculated assuming load torque is proportional to square of speed.

Note : Owing to continuous upgradation of our design, performance parameters and dimensions are subject to change without prior notice.

Dimension Drawing M2BA315 (Foot Mounted)
Mounting Designation B3, IM1001

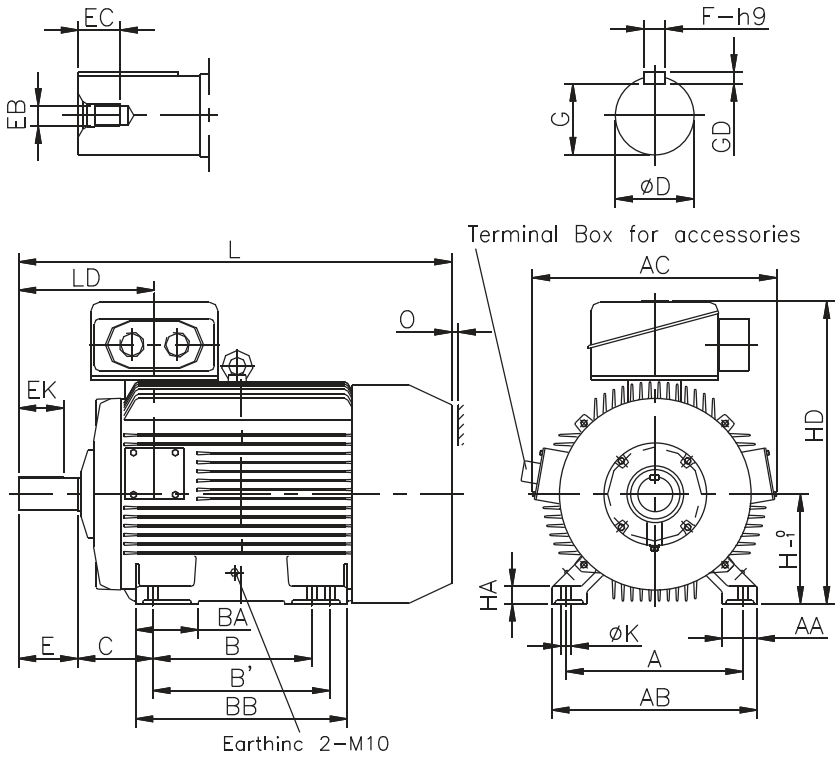

Dimension Drawing M2BA315 (Flange Mounted)
Mounting Designation B5, IM3001

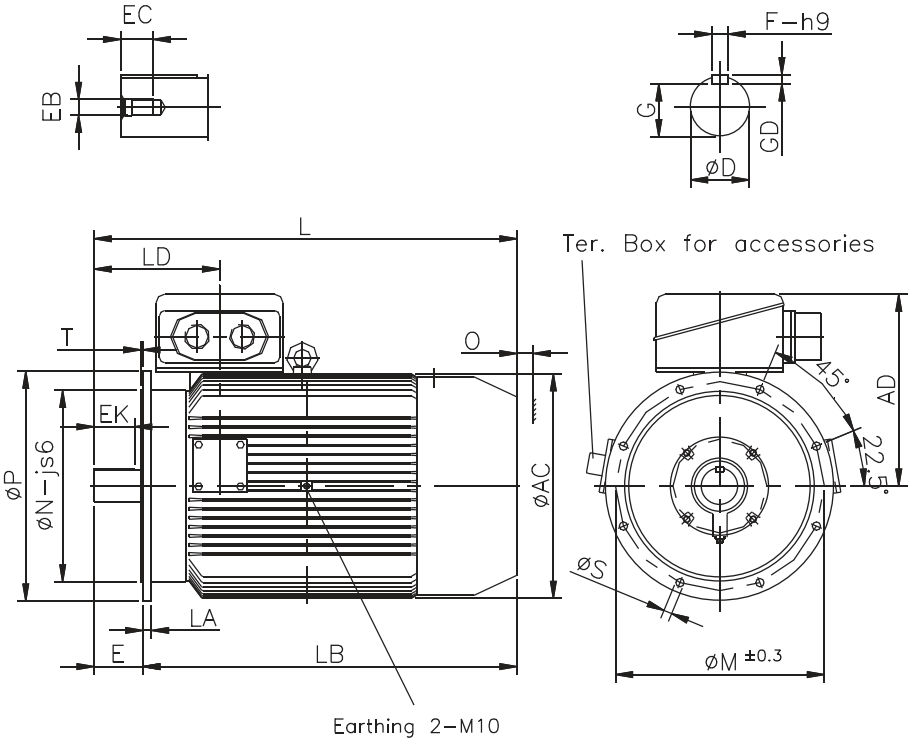

Type		A	AA	AB	AC	B	B'	BA	BB	C	D TOL.		E	EB
M2BA315SM	2 Pole	508	120	620	645	406	457	180	589	216	65	m6	140	M20
	4-8 Pole										80	m6	170	
M2BA315ML	2 Pole	508	120	620	645	457	508	180	608	216	65	m6	140	
	4-8 Pole										90	m6	170	M24

Type		AC	AD	D TOL.		E	EB	EC	EK	F	G	GD	L	LA	LB
M2BAF315SM	2 Pole	645	557	65	m6	140	M20	40	115	18	58	11	1169	22	1029
	4-8 Pole			80	m6	170			130	22	71	14	1199		
M2BAF315ML	2 Pole	645	557	65	m6	140	M20	40	115	18	58	11	1215	22	1075
	4-8 Pole			90	m6	170	M24	48	130	25	81	14	1245		

Type		EC	EK	F	G	GD	H	HA	HD	K	L	LD	O	Bearings	
														D	N
M2BA315SM	2 Pole	40	115	18	58	11	315	50	872	28	1169	360.5	115	6316C3	6316C3
	4-8 Pole		130	22	71	14					1199	390.5		6319C3	6316C3
M2BA315ML	2 Pole	40	115	18	58	11	315	50	872	28	1215	360.5	115	6316C3	6316C3
	4-8 Pole	48	130	25	81	14					1245	390.5		6319C3	6316C3

Type		LD	M	N	P	S	T	O	Bearings	
									D	N
M2BAF315SM	2 Pole	360.5	600	550	660	24	6	115	6316C3	6316C3
	4-8 Pole	390.5							6319C3	6316C3
M2BAF315ML	2 Pole	360.5	600	550	660	24	6	115	6316C3	6316C3
	4-8 Pole	390.5							6319C3	6316C3

Note : All Dimensions are in mm

Dimension Drawing M2BA355 (Foot Mounted)

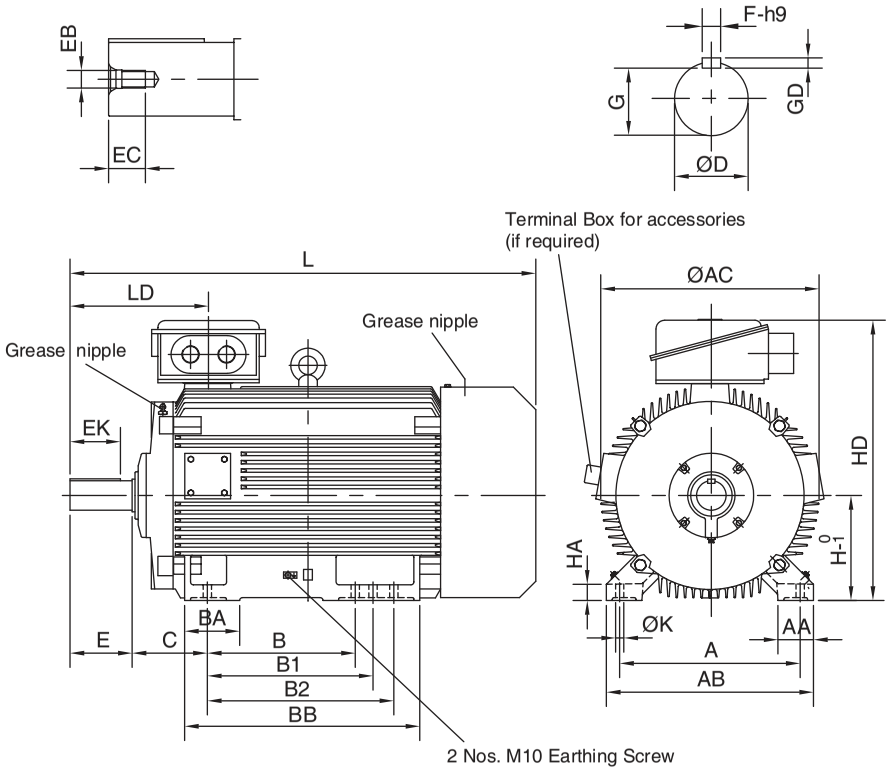

Dimension Drawing M2BA355 (Flange Mounted)

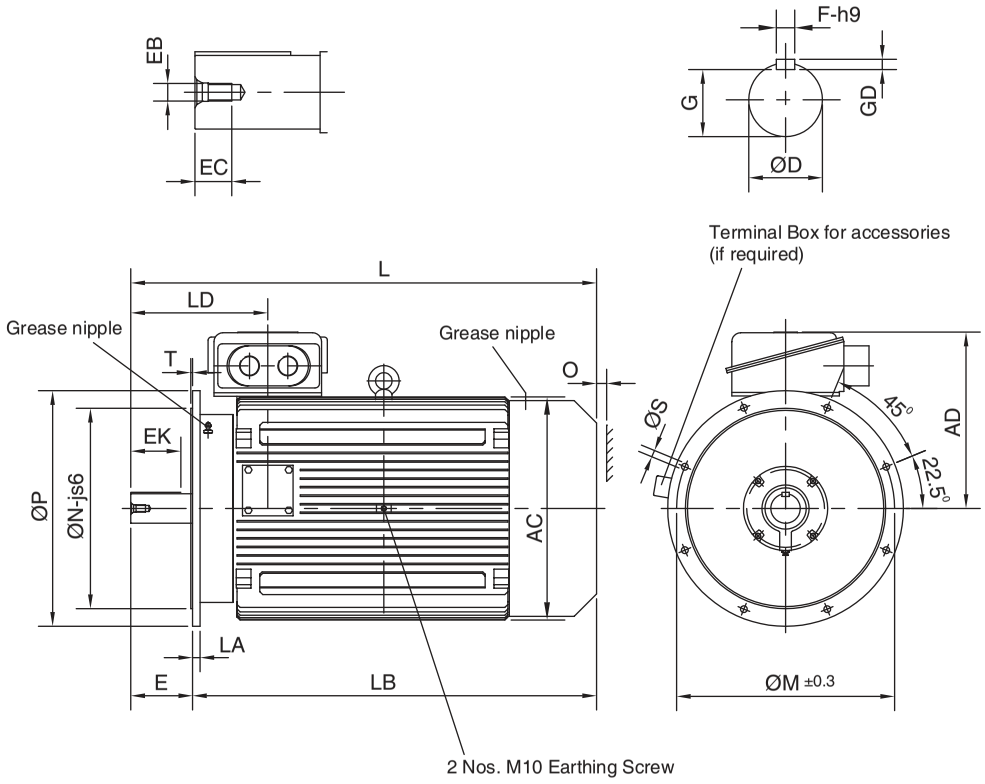

Type		A	AA	AB	AC	B	B1	B2	BA	BB	C	D TOL.		E	EB
M2BA355SML	2 Pole	610	120	700	740	500	560	630	186	795	254	75	m6	140	M20
	4-8 Pole											100	m6	210	M24

Type		AC	AD	D TOL.		E	EB	EC	EK	F	G	GD	L
M2BAF355ML	2 Pole	740	610	75	m6	140	M20	40	115	20	67.5	12	1505
	4-8 Pole			100	m6	210	M24	48	170	28	90	16	1575

Type		EC	EK	F	G	GD	H	HA	HD	K	L	LD	O	Bearings	
														D	N
M2BA355SML	2 Pole	40	115	20	67.5	12	355	55	965	28	1505	395	130	6319C3	6319C3
	4-8 Pole	48	170	28	90	16					1575	465		6322C3	6319C3

Type		LA	LB	LD	M	N	P	S	T	O	Bearings	
											D	N
M2BAF355ML	2 Pole	25	1365	395	740	680	800	24	6	130	6319C3	6319C3
	4-8 Pole			465							6322C3	6319C3

Note : All Dimensions are in mm

The 'M2000' Series

M2000 Motors have been engineered for the twin objective of high power to weight ratio and efficiency at a designed ambient of 50°C. The performance of 'M2BA' is well ahead of relevant IEC & IS standards resulting in lower energy consumption, reduced operational costs and ultimately faster returns on investment. 'M2BA' Motors have a wide range of applications including windmill.

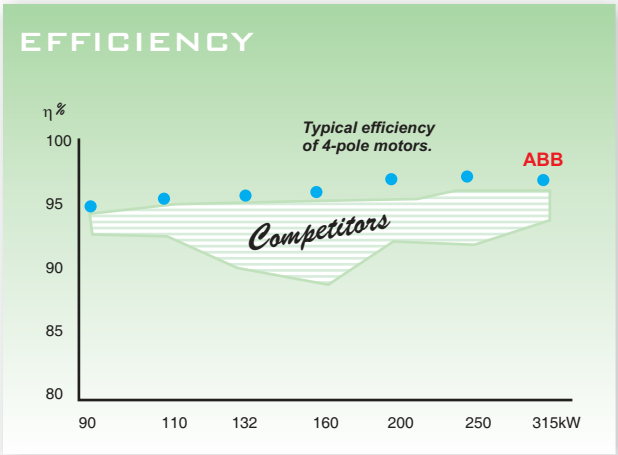

Heavy duty design

The electrical and mechanical design of 'M2BA' Motors offer high performance values in all the mounting arrangements, protection class and in all applications. 'M2BA' Motors have withstood the test of time and are established for reliability in stringent operating conditions like thermal power plants world wide.

Installation Flexibility

A dual mounting hole is provided for installation flexibility i.e. same housing length can be used for varied mounting applications.

IP55

'M2BA' Motors are protected against the ingress of water and dust. A high degree of protection IP 55 is a standard feature of 'M2BA' Motors. Higher degrees of protection (e.g. IP 56) can also be made available on request.

Insulation scheme

'M2BA' Motors employ a unique polyamide based Class F insulation scheme rated for 155°C with temperature rise limited to Class B. The advanced insulation the 'M2000' series gives high electrical and mechanical stability. This provides a generous thermal overload margin bringing greater reliability and improves life of the motor. This can be used for such conditions as increased load, high ambient temperature and variations in voltage and frequency.

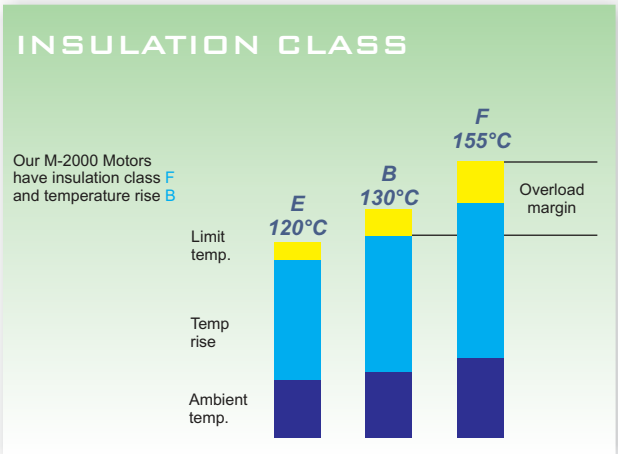

User friendly design

'M2BA' Motors have a user friendly design and less number of components leading to faster and trouble-free dismantling and assembly.

Enclosure

'M2BA' Motors use rigid cast iron / fabricated housings and are provided with integrated deeper longitudinal ribs designed to give maximum cooling surface area. Integral feet ensure that the frame is rigid and vibration resistants. These frames are treated for high corrosion resistance. Effective and robust corrosion protection means that the motor can be used in all environments.

Winding

Stator winding uses high quality enamelled wires conforming to IS:13730. The windings are reinforced in the slots with slot wedges and on the overhang with fibre glass tape. To ensure long life, the stator is impregnated with a solventless resin. Gaps between individual conductors are effectively filled with this material resulting in good thermal conductivity and superior mechanical strength. All windings are tropicalised with epoxy gelcoat and made Insensitive to moisture and micro-organisms.

Ventilation

Ventilation circuit of 'M2BA' has been optimally designed based on aerodynamic and acoustic considerations. Special design of fan blades and segmental groupings of fins in horizontal and vertical planes offer the most efficient air flow and minimum air borne noise while incurring least windage losses.

Low noise levels

'M2BA' Motors are the result of special efforts made to minimize electromagnetic, airborne and structural noise. These motors are designed for quieter operation even under abnormal load conditions.

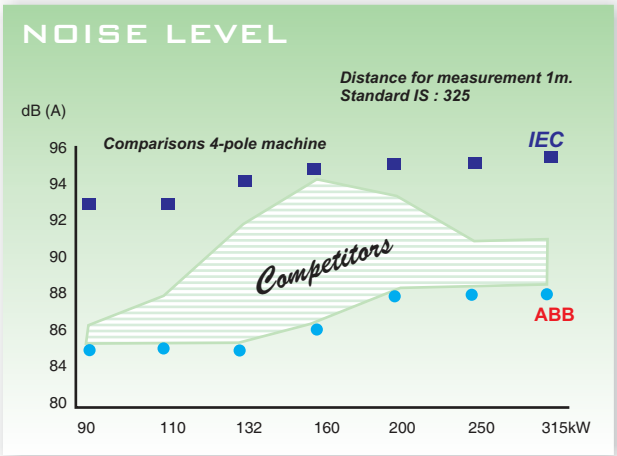

Terminal box

The spacious terminal box makes the motor quick and easy to connect. The terminal box can be rotated so that cables can be connected from the right or the left. Further, positioning of the terminal box assembly on the side or the top can also be made available on request. Flexible orientation of the terminal box with liberal sizing for easy access are design inbuilt.

Bearings

'M2BA' Motors use appropriately selected ball bearings with high temperature grease to give increased life and reliability. For high radial loads and belt driven applications roller bearings are provided. 'M2BA' Motors are provided with regreasing facility.

Voltage ranges for extra versatility

The motors are matched to the standard voltages applicable in India i.e. 415V. However, motors for voltages ranging from 220V to 660V can also be provided on request.

Frequency converter drive

'M2BA' Motors are backed by the world class technology to incorporate inherent features in the design to take care of harmonics in frequency converter and yet offer the best performance. Special attention is given to mechanical features of 'M2BA' for reliable operation at extremes of speed range in variable speed applications.

ABB Limited
BU -LV Motors
32, Industrial Area,
N.I.T., Faridabad - 121 001
INDIA.
Tel: +91 129 4023001-05
Fax : +91 129 4023006

Regional Marketing Offices :

North

14, Mathura Road,
Faridabad - 121 003
Tel: +91 129 - 2275592/9627
Fax: +91 129 - 2275019

Chandigarh
ABB Ltd.
SCO-13,14,15,
3rd Floor, Sector-34A,
Chandigarh-160022
Tel: +91 172 2606375
Fax: +91 172 2601618

Jaipur
Tel: +91 141 2744024
Fax: +91 141 2744027

Lucknow
Tel: +91 522 2209436
Fax: +91 522 2209478

Ludhiana
Tel: +91 161 5082395
Fax: +91 161 5082396

Dehradun
Tel: +91 135 2760654
Fax: +91 135 2760655

East

No. 9, 4th Floor
Lala Lajpat Rai
Sarani, (Elgin Road)
Kolkata 700 020
Tel: +91 33 22832911/06
Fax: +91 33 22892990

Bhubaneshwar
Tel: +91 674 2541062
Fax: +91 674 2540985

Jamshedpur
Tel: +91 657 2224016
Fax: +91 657 2223009

Guwhati
Tel: +91 361 2133055

West

ABB House
Dr. S B Path
Ballard Estate
Mumbai 400 038
Tel: +91 22 56318231-39
Fax: +91 22 56318276-77

Pune
Tel: +91 20 25881503-06
Fax: +91 20 56016255

Vadodara
Tel: +91 265 2642141-42
Fax: +91 265 2638911

Ahemadabad
Tel: +91 679 22871478

Nagpur
Tel: +91 9822737622

Central

4th & 5th Floor,
Maruti Heights
Aamanaka, G.E. Road
Raipur - 492 099
Tel: +91 771 4701016-18
Fax: +91 771 4701019

Bhopal
ABB Ltd.
FF-9A, Mansarovar
Commercial Complex,
Hosangabad Road,
Bhopal-462016
Tel: +91 755 4223572
Fax: ++91 755 4253323

Indore
Tel: +91 731 - 2481288

South

Embassy Star, 1st Floor
No. 8, Palace Road
Vasanth Nagar
Bangalore-560 052
Tel: +91 80 22949779/815
Fax: +91 80 22949808

Century Plaza
No. 3C, 3D, 3F, 3rd Floor
561 / 562, Anna Salai
Teynampet
Chennai 600 018
Tel: +91 44 24340201-203
Fax: +91 44 24340282

Coimbatore
Tel: +91 422 2313415
Fax: +91 422 2313415

Hyderabad
Tel: +91 40 27675988
Fax: +91 40 27607580

Kochi
Tel: +91 484 3942600
Resident Manager:
Tel: +91 94471 37264

Visakhapatnam
Tel: +91 891 2538188

www.abb.co.in

Cat - 03 R0 01-05-07

Flame Proof Motors
For Hazardous Environment

JHX

ABB

Introduction

The use of electrical motors in potentially explosive atmospheres is quite frequent these days. These motors have to be constructed in such a way that there is no risk of an explosion. An Explosion occurs when the following situations occur:

- presence of potentially explosive atmosphere
- existence of a source of ignition
- possibility of transmission of the explosion

Classification of Hazardous Environment:

According to IS: 5572, Hazardous areas are classified in the following ways depending on the degree of probability of the presence of hazardous atmosphere.

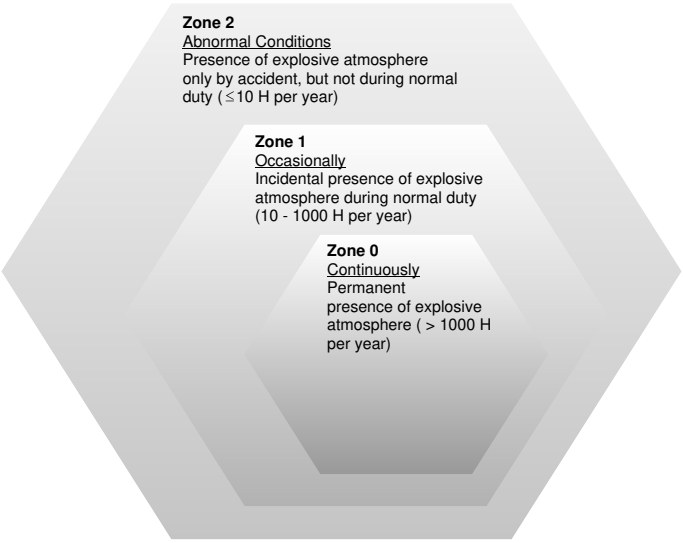

Zone	Criteria presence of gas
Zone 0	Continuously of very long period
Zone 1	Present in normal operations
Zone 2	Unlikely, but if present, only for a short time

In Zone 0, no electrical motors can be installed. Most common motor for Zone 1 is the flameproof design, but it can also be used in Zone 2.

Application Groups:

Depending on the intended use, explosion-proof electrical operating equipment is divided into two major groups:

Group I	Equipment for coal mines (only specially designed motors for mines can be used)
Group II	Electrical equipment for use other than mines (surface industry)
Group II	motors with flameproof enclosures are still further divided into gas groups:
II A	Propane
II B	Ethylene
II C	Hydrogen

Temperature Classes:

Combustible gas or vapour and explosion-protected electrical equipment are divided into temperature of the gas or to T6 with regard to the ignition temperature of the gas or vapour and the maximum surface temperature of the component.

Temperature class	Ignition temperature for the gas / vapour °C		Maximum permitted temperature of electrical equipment °C
T1	>450		450
T2	>300	<450	300
T3	>200	<300	200
T4	>135	<200	135
T5	>100	<135	100
T6	>85	<100	15

Flame proof motors, type "d"

ABB motors of flame proof design (type JHX) are TEFC, 3 phase squirrel cage induction motor (as per IS:2148 - 2004) for operation in hazardous location classified as Zone 1 and Zone 2 areas as per IS:5572

Note: Other frame sizes are available on request.

The motor enclosure has been designed in such a way that no internal explosion can be transmitted to the explosive atmosphere surrounding the machine. The enclosure must withstand, without damage, any pressure levels caused by an internal explosion, the shape, length and gap of part assembly joints at shaft opening, cable entries, etc.., shall be designed to allow for throttling and cooling of hot gases escaping outside. The standard emphasise the impact of an explosive atmosphere
(for instance, explosion pressure) over constructional requirements of such apparatus.
Range:0.25 ..... 15kW, 0.33 .....20hp
Frame:JHX71 .....JHX160
Pole:2 8

Features:

1. Motors suitable for high ambient temperature 50ºC.
2. Keeps an explosion which takes place inside the enclosure from propagating through gaps to the ambient.
3. Withstands the explosion pressure created inside the enclosures.
4. Benefits when dealing with special operating modes such as heavy stars and special applications.
5. All surface temperatures are selected to comply with the temperature class.
6. Suitability for use in temperature classes T1 toT4.
7. Can be used both in Zone 1 and Zone 2.

TEFC, S1 Duty
415 ± 10% V, 50 ± 5%Hz.
Combined Variation of ±10%

Insulation Class F, Ambient Temp. = 50^0 C
Temperature rise class B (70^0 C)
Gas Group IIA & IIB

2 Pole

Output		Frame Size	Rated	Current		Efficiency %			Power Factor			Torque			T_{hot}	T_{cold}	Gd2	Weight
kW	HP		Speed (rpm)	In(A)	I_s/I_n(A)	FL	3/4FL	1/2FL	FL	3/4FL	1/2FL	T_s/T_n	T_{max}/T_n	T_n(Nm)	(Sec)	(Sec)	Kgm2	Kg
0.37	0.50	JHX71C2	2790	0.9	4.2	66.0	68.0	64.0	0.84	0.77	0.50	2.0	2.4	1.3	5	12	0.001	17
0.55	0.75	JHX71D2	2790	1.3	4.3	68.0	66.0	60.0	0.82	0.75	0.64	2.0	2.5	1.9	5	12	0.002	17
0.75	1.0	JHX80C2	2780	1.7	4.8	73.0	72.0	68.0	0.90	0.84	0.74	2.1	2.3	2.6	7	16	0.003	21
1.1	1.5	JHX80D2	2790	2.5	5.0	76.0	74.0	71.0	0.88	0.81	0.70	2.1	2.4	3.8	7	16	0.004	22
1.5	2.0	JHX90SLC2	2865	2.9	6.0	81.0	81.0	77.0	0.90	0.84	0.74	2.2	3.0	5.0	5	10	0.008	33
2.2	3.0	JHX90SLD2	2865	4.2	6.0	81.5	81.5	77.5	0.90	0.84	0.74	2.1	3.0	7.3	6	12	0.009	35
3.7	5.0	JHX100LB2	2830	7.2	6.0	80.0	79.5	77.5	0.87	0.84	0.74	2.2	2.7	12.5	6	12	0.044	55
5.5	7.5	JHX132SMB2	2870	10.0	6.0	84.0	84.0	83.0	0.88	0.86	0.83	2.1	3.0	18.3	7	14	0.052	83
7.5	10.0	JHX132SMC2	2870	13.5	6.0	86.0	86.0	85.0	0.90	0.88	0.85	2.4	3.0	25.0	7	14	0.072	92
9.3	12.5	JHX132SME2	2870	16.0	6.0	86.5	86.5	85.5	0.91	0.89	0.86	2.5	3.0	30.9	9	20	0.092	100
11.0	15.0	JHX160MLB2	2900	20.0	6.0	88.0	88.0	87.0	0.87	0.85	0.82	2.2	2.8	36.2	12	28	0.128	139
15.0	20.0	JHX160MLD2	2900	26.0	6.0	89.0	89.0	88.0	0.87	0.85	0.82	2.2	3.0	49.4	12	28	0.152	151
18.5	25.0	JHX160MLE2	2900	32.0	6.0	91.0	91.0	90.0	0.90	0.87	0.84	2.5	2.9	60.9	12	28	0.182	164

4 Pole

Output		Frame Size	Rated	Current		Efficiency %			Power Factor			Torque			T_{hot}	T_{cold}	Gd2	Weight
kW	HP		Speed (rpm)	In(A)	I_s/I_n(A)	FL	3/4FL	1/2FL	FL	3/4FL	1/2FL	T_s/T_n	T_{max}/T_n	T_n(Nm)	(Sec)	(Sec)	Kgm2	Kg
0.25	0.33	JHX71B4	1370	0.7	3.5	63.0	61.0	55.0	0.80	0.68	0.54	1.9	2.4	1.7	7	16	0.003	16
0.37	0.50	JHX71C4	1370	1.1	3.5	64.0	62.0	56.0	0.80	0.68	0.54	2.0	2.4	2.6	7	16	0.004	17
0.55	0.75	JHX80D4	1400	1.5	3.5	65.0	64.0	60.0	0.76	0.65	0.52	2.0	2.4	3.8	6	14	0.007	21
0.75	1.00	JHX80E4	1380	2.0	3.5	68.0	67.0	62.0	0.76	0.65	0.52	2.0	2.4	5.2	5	12	0.008	22
1.1	1.5	JHX90SLD4	1420	2.5	5.5	76.0	76.0	74.0	0.80	0.71	0.56	2.0	2.7	7.4	5	10	0.015	34
1.5	2.0	JHX90SLE4	1420	3.4	5.5	77.0	77.0	75.0	0.81	0.73	0.62	2.0	2.7	10.1	5	12	0.017	36
2.2	3.0	JHX100LB4	1405	4.8	5.5	78.0	78.0	76.0	0.81	0.73	0.62	2.2	2.7	15.0	5	12	0.026	55
3.7	5.0	JHX112MB4	1425	7.6	6.0	83.0	83.0	81.0	0.81	0.74	0.63	2.1	2.8	24.8	5	14	0.050	67
5.5	7.5	JHX132SMC4	1430	11.0	6.0	85.0	85.0	83.0	0.82	0.75	0.64	2.0	2.8	36.7	7	16	0.088	91
7.5	10	JHX132SME4	1430	14.5	6.0	85.5	85.5	83.5	0.83	0.76	0.64	2.0	2.8	50.1	8	16	0.112	99
9.3	12.5	JHX160MLB4	1455	18.8	6.0	88.0	88.0	86.0	0.81	0.74	0.63	2.2	2.8	61.0	8	18	0.028	138
11	15	JHX160MLD4	1455	21.0	6.0	89.0	89.0	87.0	0.82	0.76	0.66	2.1	2.8	72.2	12	28	0.252	151
15	20	JHX160MLE4	1450	28.0	6.0	89.0	89.0	87.0	0.82	0.76	0.66	2.1	2.8	98.8	14	30	0.272	162

6 Pole

Output		Frame Size	Rated	Current		Efficiency %			Power Factor			Torque			T_{hot}	T_{cold}	Gd2	Weight
kW	HP		Speed (rpm)	In(A)	I_s/I_n(A)	FL	3/4FL	1/2FL	FL	3/4FL	1/2FL	T_s/T_n	T_{max}/T_n	T_n(Nm)	(Sec)	(Sec)	Kgm2	Kg
0.25	0.33	JHX80D6	880	0.7	3.5	64.0	62.0	58.0	0.73	0.65	0.52	1.8	2.0	2.7	10	24	0.008	21
0.37	0.50	JHX80D6	885	1.0	3.5	67.0	65.0	61.0	0.73	0.65	0.52	2.1	2.4	4.0	10	24	0.008	22
0.55	0.75	JHX80E6	880	1.5	3.5	66.0	64.0	60.0	0.73	0.65	0.52	1.9	2.2	6.0	10	24	0.009	23
0.75	1.0	JHX90SLD6	915	2.0	3.5	73.0	73.0	70.0	0.70	0.60	0.52	1.8	2.1	7.8	10	24	0.015	34
1.1	1.5	JHX90SLE6	915	2.9	3.5	74.0	74.0	71.0	0.70	0.60	0.52	1.8	2.1	11.2	12	25	0.017	36
1.5	2.0	JHX100LB6	935	4.0	4.5	75.5	75.5	72.5	0.70	0.61	0.52	2.2	2.5	15.3	10	24	0.026	55
2.2	3.0	JHX112MB6	940	5.9	5.0	78.5	78.5	76.5	0.70	0.61	0.54	2.0	2.5	21.9	10	20	0.050	67
3.7	5.0	JHX132SMC6	955	8.3	5.5	83.0	83.0	81.0	0.70	0.66	0.54	2.2	2.6	36.8	8	19	0.088	90
5.5	7.5	JHX132SME6	955	12.2	5.5	83.5	83.5	81.5	0.72	0.68	0.62	2.2	2.6	54.4	10	20	0.120	98
7.5	10	JHX160MLC6	960	15.5	5.5	87.5	87.5	86.5	0.77	0.72	0.60	1.9	2.5	74.6	8	18	0.326	142
9.3	12.5	JHX160MLD6	965	19.0	6.0	88.0	88.0	86.0	0.77	0.72	0.60	2.0	2.5	92.0	8	18	0.372	150
11	15	JHX160MLE6	965	23.0	6.0	88.0	88.0	86.0	0.77	0.72	0.60	2.0	2.5	109	9	20	0.446	162

8 Pole

Output		Frame Size	Rated	Current		Efficiency %			Power Factor			Torque			T_{hot}	T_{cold}	Gd2	Weight
kW	HP		Speed (rpm)	In(A)	I_s/I_n(A)	FL	3/4FL	1/2FL	FL	3/4FL	1/2FL	T_s/T_n	T_{max}/T_n	T_n(Nm)	(Sec)	(Sec)	Kgm2	Kg
0.37	0.50	JHX90SLA8	680	1.4	2.8	58.0	55.0	48.0	0.65	0.55	0.40	1.6	1.9	5.20	10	24	0.012	30
0.55	0.75	JHX90SLD8	680	1.9	3.2	63.0	60.0	54.0	0.63	0.55	0.40	1.8	2.1	7.70	10	24	0.015	34
0.75	1.0	JHX100LA8	695	3.1	3.0	63.0	62.0	57.0	0.56	0.50	0.37	1.8	2.1	10.3	10	24	0.02	50
1.1	1.5	JHX100LB8	695	3.9	3.0	62.5	62.0	57.0	0.59	0.51	0.38	1.8	2.3	15.1	10	24	0.026	55
1.5	2.0	JHX112MA8	700	4.8	3.5	69.0	67.0	63.0	0.60	0.51	0.41	1.8	2.3	20.5	9	20	0.044	64
2.2	3.0	JHX132SMB8	710	6.3	4.1	77.0	76.0	71.0	0.65	0.55	0.42	1.9	2.4	29.6	8	19	0.06	83
3.7	5.0	JHX160MLB8	715	8.0	5.1	82.5	82.5	79.5	0.77	0.70	0.55	1.8	2.4	49.4	9	20	0.288	137
5.5	7.5	JHX160MLD8	715	12.0	5.1	84.5	83.5	81.5	0.79	0.72	0.59	1.8	2.5	73.5	13	29	0.372	149
7.5	10	JHX160MLE8	715	16.0	5.1	85.0	84.0	82.0	0.79	0.72	0.59	1.8	2.5	98.8	15	30	0.446	161

I_n = Nominal or rated current
T_n = Nominal or rated torque in Nm
T_{max} = Maximum torque
T_{cold} = Cold withstand time

I_s = Starting current
T_s = Starting torque
T_{hot} = Hot withstand time

Note :
1. All performance figures are subject to IS tolerances.
2. Max. load GD^2 has been calculated assuming load torque is proportional to square of speed.

Note : Owing to continuous upgradation of our design, performance parameters and dimensions are subject to change without prior notice.

Dimension Drawing Foot Mounted Flame Proof Motors 71....160
Mounting Designation B3, B6, B7, B8, V5, V6

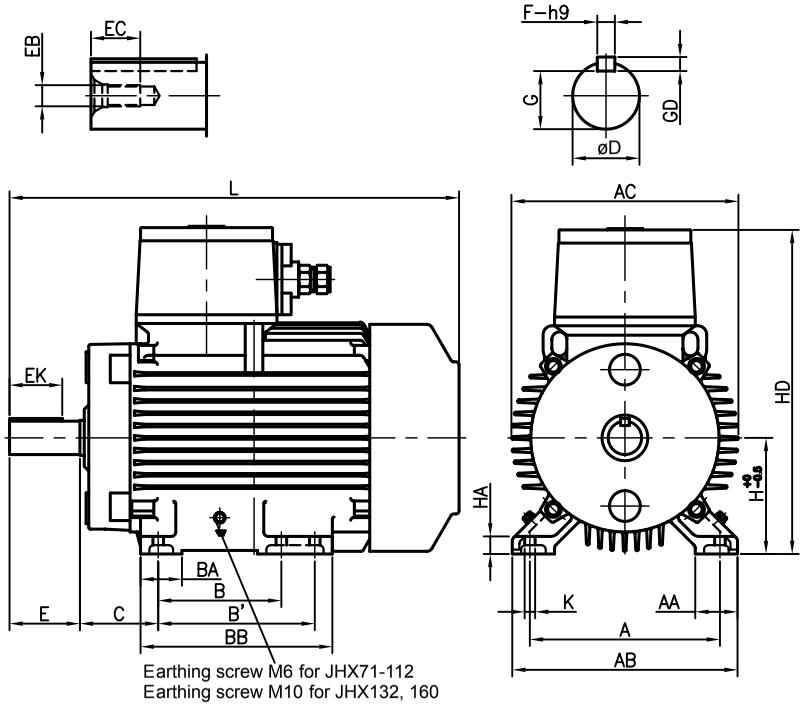

Type	A	AA	AB	AC	B	B'	BA	BB	C	D	Tol.	E	EB	EC	EK
JHX 71	112	25	130	140.5	90	-	26	110	45	14	j6	30	M5	12	16
JHX 80	125	25	147	158	100	-	30	126	50	19	j6	40	M6	17	24
JHX 90SL	140	27	162	174	100	125	40	158	56	24	j6	50	M8	19	32
JHX 100L	160	42	200	203	140	-	47	180	63	28	j6	60	M10	22	42
JHX 112M	190	48	230	225	140	-	47	180	70	28	j6	60	M10	22	42
JHX 132SM	216	48	256	258	140	178	47	218	89	38	k6	80	M12	28	60
JHX 160ML	254	60	310	305	210	254	65	310	108	42	k6	110	M16	36	90

TYPE	F	G	GD	H	HA	HD	K	L	Bearings	
									D	N
JHX 71	5	11	5	71	9	218	7	268	6203ZZC3	6202ZZC3
JHX 80	6	15.5	6	80	10	234	10	314	6204ZZC3	6203ZZC3
JHX 90 SL	8	20	7	90	13	252	10	363	6205ZZC3	6205ZZC3
JHX 100L	8	24	7	100	15	317	12	400	6306ZZC3	6206ZZC3
JHX 112M	8	24	7	112	18	337	12	420	6307ZZC3	6206ZZC3
JHX 132SM	10	33	8	132	20	374	12	511	6308ZZC3	6307ZZC3
JHX160ML	12	37	8	160	22	457	15	702	6309ZZC3	6308ZZC3

Dimension Drawing Flange Mounted Flame Proof Motors 71....160
Mounting Designation B5, V1, V3

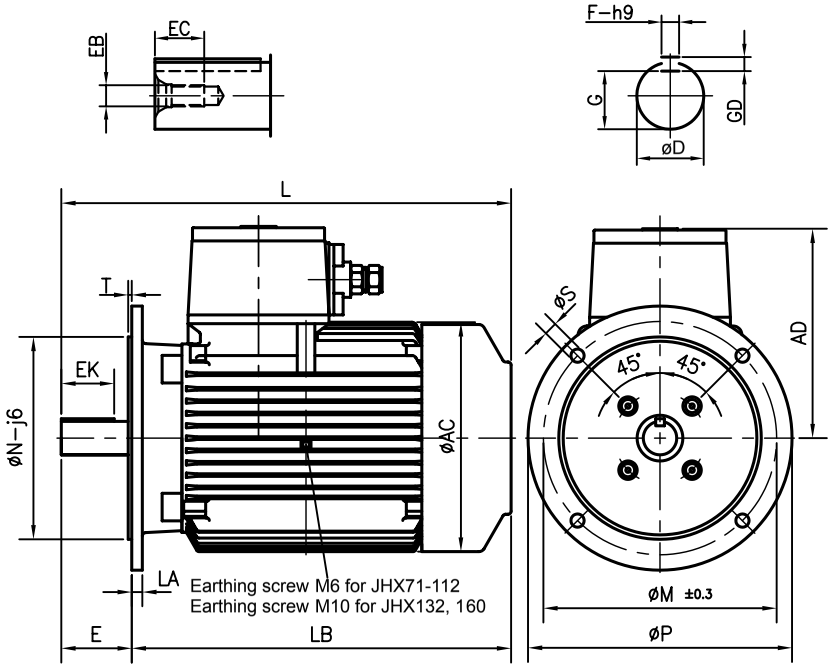

Type	AC	AD	D	Tol.	E	EB	EC	EK	F	G	GD
JHXF 71	140.5	147	14	j6	30	M5	12	16	5	11	5
JHXF 80	158	154	19	j6	40	M6	17	24	6	15.5	6
JHXF 90SL	174	162	24	j6	50	M8	19	32	8	20	7
JHXF 100L	220	217	28	j6	60	M10	22	42	8	24	7
JHXF 112M	225	225	28	j6	60	M10	22	42	8	24	7
JHXF 132SM	258	242	38	k6	80	M12	28	60	10	33	8
JHXF 160ML	305	297	42	k6	110	M16	36	90	12	37	8

TYPE	L	LA	LB	M	N	P	S	T	Bearings	
									D	N
JHXF 71	268	9	238	130	110	160	10	3.5	6203ZZC3	6202ZZC3
JHXF 80	314	10	274	165	130	200	12	3.5	6204ZZC3	6203ZZC3
JHXF 90SL	363	10	313	165	130	200	12	3.5	6205ZZC3	6205ZZC3
JHXF 100L	400	11	340	215	180	250	15	4	6306ZZC3	6206ZZC3
JHXF 112M	420	11	360	215	180	250	15	4	6307ZZC3	6206ZZC3
JHXF 132SM	511	12	431	265	230	300	15	4	6308ZZC3	6307ZZC3
JHXF 160ML	702	16	592	300	250	350	19	5	6309ZZC3	6308ZZC3

Terminal Box

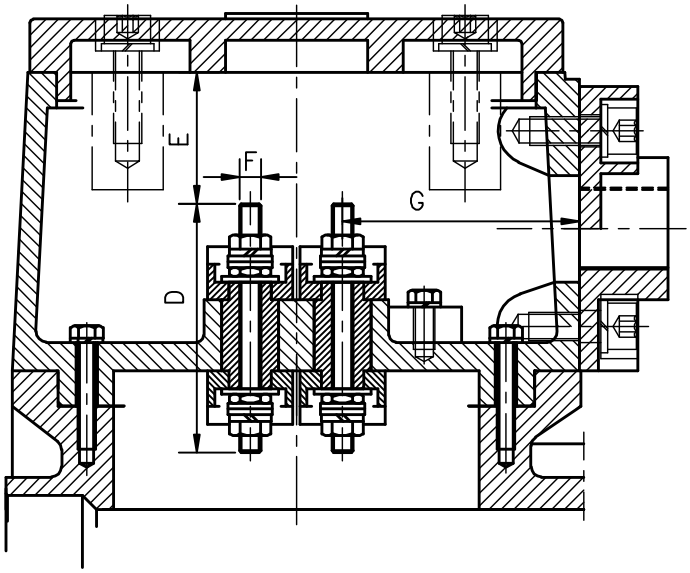

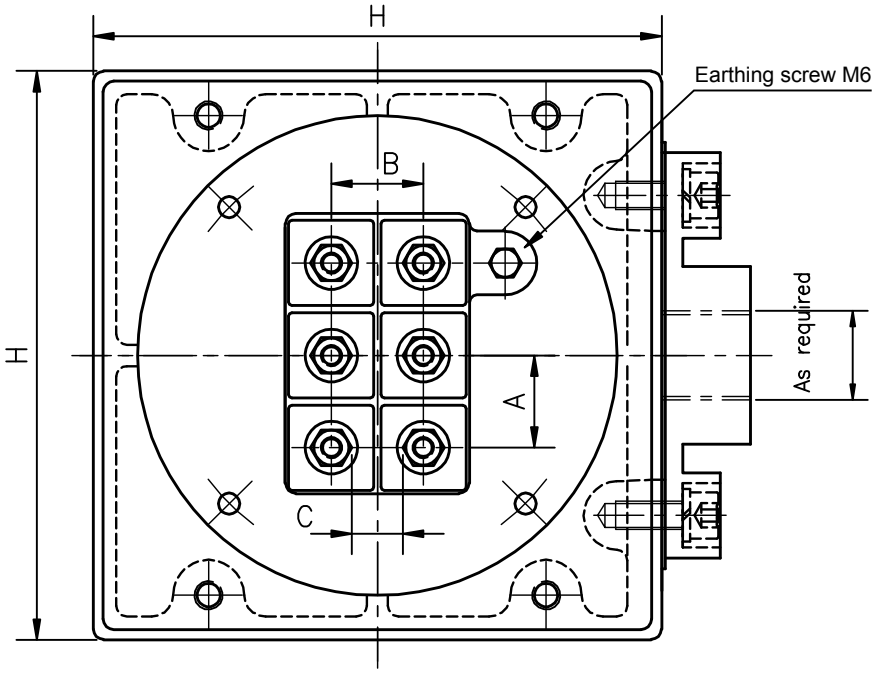

Type	A	B	C	D	E	F	G	H
JHX 71 - 90	20	20	10.5	50	27	M5	42	115
JHX 100-132	26	26	13.5	75	32	M6	66.5	160
JHX 160	32	32	15	94	39	M8	94	210

* For JHX160, conduit entry is double

Certifications and Approvals for ABB Make Flame - Proof Motors

CMRI/ERTL Certificate No.	CCE Certificate No.	DGFASLI Certificate No.	BIS Certificate No.	Frame
CIMFR/TC/P/113 Dt. 12.05.2009	A/P/HQ/MH/104/1889 (P234925/1) Dt 27.07.2009	66/7/2009 - Tech Dt. 02.07.2009	CM/L 1327946	JHX71
CIMFR/TC/P/60 Dt. 05.05.2009	A/P/HQ/MH/104/1856 (P233102/1) Dt. 15.06.2009	66/7/2009 - Tech Dt. 02.07.2009	CM/L 1327946	JHX80
CMRI/TC/P/H409 Dt. 28.08.2006	A/P/HQ/MH/104/1270 (P187868) Dt. 23.11.2006	66/07/2006 - Tech Dt. 15.11.2006	CM/L 1327946	JHX90
CIMFR/TC/SR/H969 Dt. 19.02.2008	A/P/HQ/MH/104/1564 (P214909) Dt. 04.07.2008	66/05/2005 - Tech Dt. 14.08.2008	CM/L 1327946	JHX100
ERTL(E)/TES/A356/0076/03-08 Dt. 02/04/2008	A/P/HQ/MH/104/1545 (P213402/1) Dt. 30.05.2008	66/05/2008 - Tech Dt. 09.06.2009	CM/L 9342275	JHX112
ERTL(E)/TES/A356/0077/03-08 Dt. 02/04/2008	A/P/HQ/MH/104/1545 (P213402/2) Dt. 30.05.2008	66/05/2008 - Tech Dt. 09.06.2009	CM/L 9342275	JHX132
ERTL(E)/TES/A356/0075/03-08 Dt. 02/04/2008	A/P/HQ/MH/104/1545 (P213402/3) Dt. 30.05.2008	66/05/2008 - Tech Dt. 09.06.2009	CM/L 9342275	JHX160

ABB Limited
32, Industrial Area,
N.I.T., Faridabad - 121 001
Tel: +91 129 4023001-05
Fax : +91 129 4023006

Regional Marketing Offices :

North

14, Mathura Road,
Faridabad - 121 003
Tel: +91 129 - 2275592/9627
Fax: +91 129 - 2275019

Chandigarh
SCO13, 14, 15, 3rd Floor,
Sec. 34 A, Chandigarh
Tel: +91 172 4321800
Fax: +91 172 2601618

Jaipur
Tel: +91 141 2744024
Fax: +91 141 2744027

Lucknow
Tel: +91 522 2209436
Fax: +91 522 2209478

Ludhiana
Tel: +91 616 4656831
Fax: +91 616 4656830

Dehradun
Tel: +91 135 2760654
Fax: +91 135 2760655

East

Omega Building, 17th Floor,
Bengal Intelligent Park,
Block EP & GP, Sector V,
Salt Lake City, Kolkata 700 091
Tel: +91 33 66213000 - 11
Fax: +91 33 66213187

Raipur
4th & 5th Floor, Maruti Heights
Aamanaka, G.E. Road,
Raipur - 492 099
Tel: +91 771 4213200
Fax: +91 771 4213222

Bhubaneshwar
Tel: +91 674 6616300 -11
Fax: +91 674 6616307

Jamshedpur
Tel: +91 657 6619204
Fax: +91 657 6619200

Guwhati
Tel: +91 361 2464260
Mob: +91 9435731532

West

ABB House
Dr. S B Path
Ballard Estate, Mumbai 400 038
Tel: +91 22 66159888
Fax: +91 22 66314203

Bhopal
FF - 9A, Mansarovar,
Commercial Complex
Hosangabad Road,
Bhopal 462016
Tel: +91 755 4223572
Fax: +91 755 4253323

Pune
Tel: +91 20 66243838
Fax: +91 20 66016255

Vadodara
Tel: +91 265 2642141-42
Fax: +91 265 2638911

Ahemadabad
Tel: +91 79 66090111

Nagpur
Tel: +91 712 6461145,46, 48, 49
Fax: +91 712 2290283

Indore
Tel: +91 9981123166

South

Khanija Bhawan, 5th Floor,
West Wing, 49, Race Course Road
Bangalore - 560 001
Tel: +91 80 22949250
Fax: +91 80 22946702/03

Chennai
Century Plaza
No. 3C, 3D, 3F, 3rd Floor
561 / 562, Anna Salai
Teynampet, Chennai - 600 018
Tel: +91 44 24340201 - 203
Fax: +91 44 24340282

Coimbatore
Tel: +91 422 2305934
Fax: +91 422 2300371

Hyderabad
Tel: +91 40 27906736,29
Fax: +91 40 27906648

Kochi
Tel: +91 484 2330342
Fax: +91 484 2370343

Visakhapatnam
Tel: +91 891 2795837
Fax: +91 891 2538188

CAT- 04 R-1 27.02.2010

www.abb.co.in